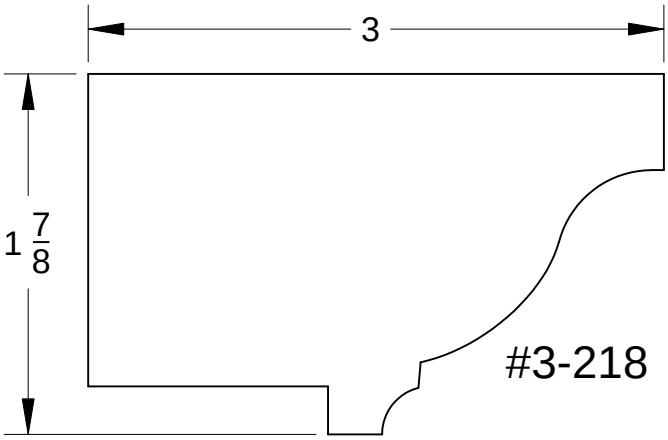

©2022 Johnson International Industries, Inc. All Rights Reserved.